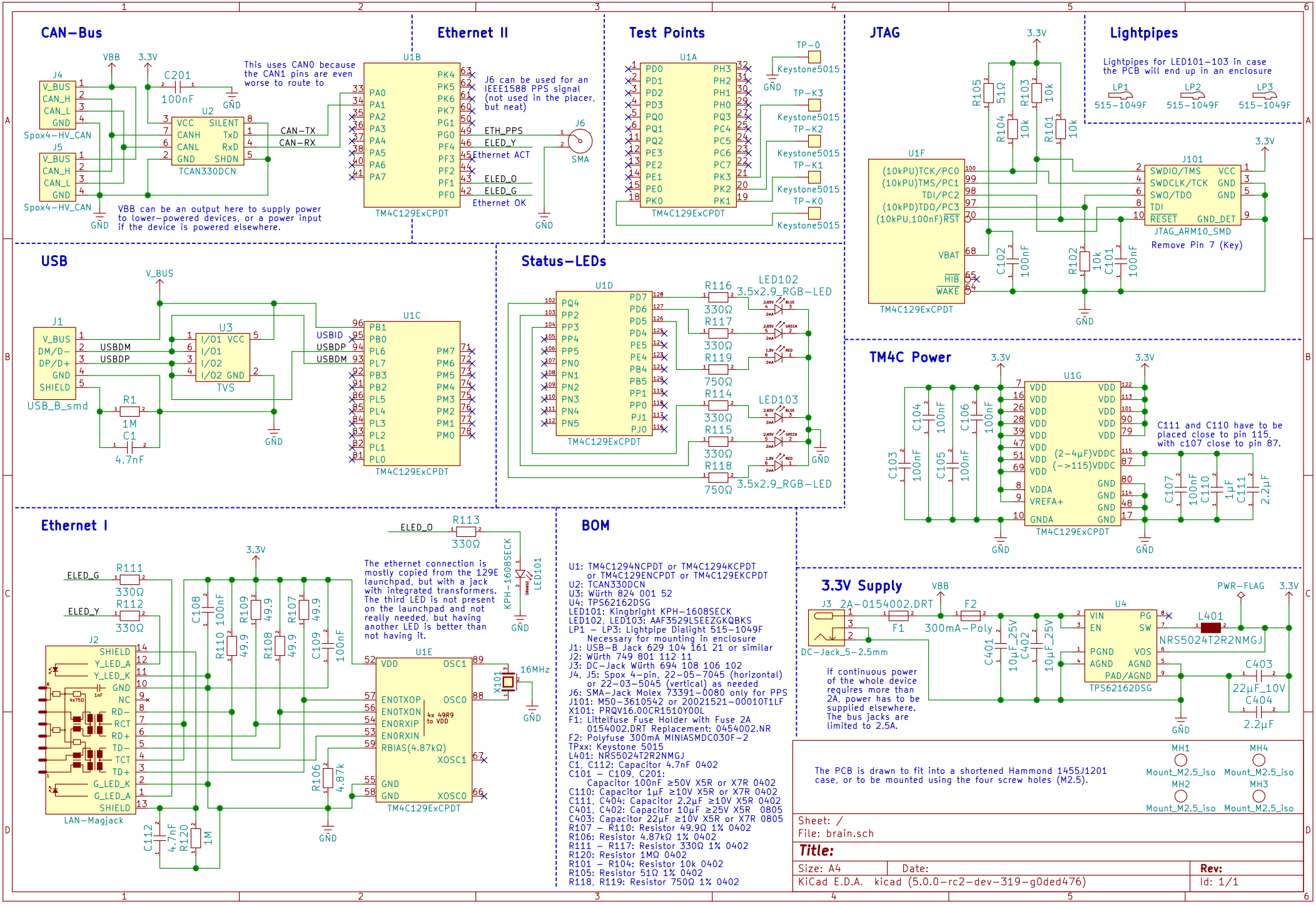
CAN-Bus
Ethernet II
Test Points
JTAG
Lightpipes
Lightpipes for LED101-103 in case the PCB will end up in an enclosure
LP1 515-1049F
LP2 515-1049F
LP3 515-1049F
This uses CAN0 because the CAN1 pins are even worse to route to
J6 can be used for an IEEE1588 PPS signal (not used in the placer, but neat)
VBB can be an output here to supply power to lower-powered devices, or a power input if the device is powered elsewhere.
Spox4-HV_CAN
TCAN330DCN
TM4C129ExCPDT
Keystone5015
SMA
JTAG_ARM10_SMD
Remove Pin 7 (Key)
USB
USB_B_smd
TVS
Status-LEDs
LED102 3.5x2.9_RGB-LED
LED103 3.5x2.9_RGB-LED
TM4C Power
C111 and C110 have to be placed close to pin 115, with c107 close to pin 87.
Ethernet I
LAN-Magjack
The ethernet connection is mostly copied from the 129E launchpad, but with a jack with integrated transformers. The third LED is not present on the launchpad and not really needed, but having another LED is better than not having it.
KPH-1608SECK
16MHz
BOM
U1: TM4C1294NCPDT or TM4C1294KCPDT or TM4C129ENCPDT or TM4C129EKCPDT
U2: TCAN330DCN
U3: Würth 824 001 52
U4: TPS62162DSG
LED101: Kingbright KPH-1608SECK
LED102, LED103: AAF3529LSEEZGKQBKS
LP1 - LP3: Lightpipe Dialight 515-1049F Necessary for mounting in enclosure
J1: USB-B Jack 629 104 161 21 or similar
J2: Würth 749 801 112 11
J3: DC-Jack Würth 694 108 106 102
J4, J5: Spox 4-pin, 22-05-7045 (horizontal) or 22-03-5045 (vertical) as needed
J6: SMA-Jack Molex 73391-0080 only for PPS
J101: M50-3610542 or 20021521-00010T1LF
X101: PRQV16.00CR1510Y00L
F1: Littelfuse Fuse Holder with Fuse 2A 0154002.DRT Replacement: 0454002.NR
F2: Polyfuse 300mA MINIASMDC030F-2
TPxx: Keystone 5015
L401: NRS5024T2R2NMGJ
C1, C112: Capacitor 4.7nF 0402
C101 - C109, C201: Capacitor 100nF ≥50V X5R or X7R 0402
C110: Capacitor 1µF ≥10V X5R or X7R 0402
C111, C404: Capacitor 2.2µF ≥10V X5R 0402
C401, C402: Capacitor 10µF ≥25V X5R 0805
C403: Capacitor 22µF ≥10V X5R or X7R 0805
R107 - R110: Resistor 49.9Ω 1% 0402
R106: Resistor 4.87kΩ 1% 0402
R111 - R117: Resistor 330Ω 1% 0402
R120: Resistor 1MΩ 0402
R101 - R104: Resistor 10k 0402
R105: Resistor 51Ω 1% 0402
R118, R119: Resistor 750Ω 1% 0402
3.3V Supply
DC-Jack_5-2.5mm
If continuous power of the whole device requires more than 2A, power has to be supplied elsewhere. The bus jacks are limited to 2.5A.
TPS62162DSG
NRS5024T2R2NMGJ
The PCB is drawn to fit into a shortened Hammond 1455J1201 case, or to be mounted using the four screw holes (M2.5).
Mount_M2.5_iso
Sheet: /
File: brain.sch
Title:
Size: A4
Date:
Rev:
KiCad E.D.A. kicad (5.0.0-rc2-dev-319-g0ded476)
Id: 1/1