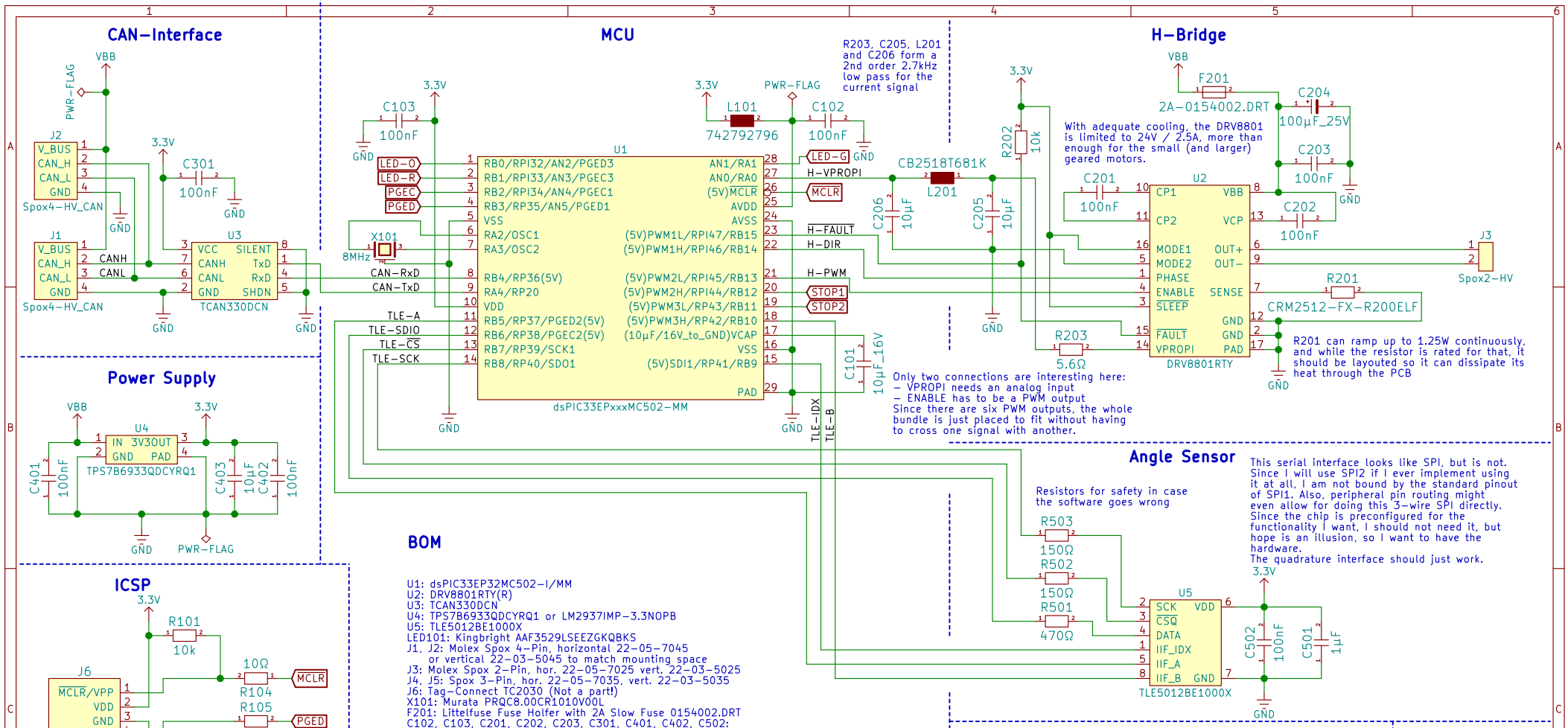

BOM

U1: dsPIC33EP32MC502-I/MM
U2: DRV8801RTY(R)
U3: TCAN330DCN
U4: TPS7B6933QDCYRQ1 or LM2937IMP-3.3NOPB
U5: TLE5012BE1000X
LED101: Kingbright AAF3529LSEEZGKQBKS
J1, J2: Molex Spox 4-Pin, horizontal 22-05-7045
or vertical 22-03-5045 to match mounting space
J3: Molex Spox 2-Pin, hor. 22-05-7025 vert. 22-03-5025
J4, J5: Spox 3-Pin, hor. 22-05-7035, vert. 22-03-5035
J6: Tag-Connect TC2030 (Not a part!)
X101: Murata PRQC8.00CR1010V00L
F201: Littelfuse Fuse Holfer with 2A Slow Fuse 0154002.DRT
C102, C103, C201, C202, C203, C301, C401, C402, C502:
Capacitor 100nF ≥50V X5R or X7R, 0402
C501: Capacitor 1µF ≥6.3V X5R or X7R, 0402
C205, C206, C403: Capacitor 10µF ≥6.3V X5R or X7R, 0402
C101: Capacitor 10µF ≥16V X5R or X7R, 0603
C204: Tantal Capacitor 100µF 25V Kemet T491X107K025AT
L101: Multilayer Inductor WE 742792796
L201: Inductor 680µH 30mA Taiyo Yuden CB2518T681K
R201: 0.2Ω 2W Shunt, CRM2512-FX-R200ELF
R203: Resistor 5.6Ω 1% 0402
R104, R105, R106: Resistor 10Ω 0402
R502, R503: Resistor 150Ω 1% 0402
R107, R108: Resistor 330Ω 1% 0402
R501: Resistor 470Ω 1% 0402
R109: Resistor 750Ω 1% 0402
R101, R102, R103, R202: Resistor 10kΩ 1% 0402
MH1, MH2, MH3, MH4: Mounting Hole, not a Part!

Parts for Cables

All plugs use crimp contacts:
08-70-1040 (loose) or
08-70-1039 (break-off tape)
Plug housings:
- 2-Pin: 50-37-5023
- 3-Pin: 50-37-5033
- 4-Pin: 50-37-5043

Sheet: /
File: motorboard-dc.sch

Title: DC Motorboard

Size: A4	Date: 2018-03-16	Rev: 1
KiCad E.D.A. kicad (5.0.0-rc2-dev-319-g0ded476)		Id: 1/1